Pulse-Bac®

Vacuum & Dust Recovery Systems Designed To Never Clog

Operation & Service Manual
Models: PB-1050, PB-1150, and PB-1250

CDCLarue™
INDUSTRIES, INC.

9384 Ridgeview Street Tulsa, OK 74131

PH: 918.216.6100 TF: 866.954.9700 FX: 918.216.6199
Email: Info@cdclarue.com URL: www.cdclarue.com

Table of Contents:

Contents:

Page

Congratulations / Safety ……. 3

Introduction / Emptying Collection Tank / Maintenance ……4

Operating & Safety Tip ……. 5

Filter Installation ……6

Specifications, Patents and Awards …….. 7

Operating as a Dust Collector with Other Equipment ……8

Electrical Circuit Block Diagram ……9

Timer PCB Functional Description ……10

Electrical Schematic, 3 / 5 Circuit Control PCB ……11

Changing Filters ……12

Replacement Parts / Part Numbers. ……13

TCS System (Tank Capacity Sensor)…….. ……14

Positioning Optional Tank Sensor ……15

Trouble Shooting Guide ……16

Servicing The Pulse-Bac…… ……17

Servicing Continued ……18

Servicing Continued ……19

Service Location Pictorials and Test Points ……20

Accessories ……21

Warranty ……22

Notes and Important Numbers ……23

Notes Continued:

CDCLarue™ Industries, Inc.
9384 Ridgeview St.
Tulsa, OK 74131

PH. 918.216.6100
FX. 918.216.6199
TF. 866.954.9700

Email: info@cdclarue.com
URL: www.cdclarue.com
URL: www.pulse-bac.com

Customer Service hours of operation: Mon—Fri. 8-5 CST

To learn more about our products and services visit our website.

NOTES:

Congratulations, you have purchased the latest innovation in commercial vacuum and dust recovery equipment. This manual will help you to get the most from your purchase.

Your **PB-1050, PB-1150, or PB-1250** is shipped free from defects; however you should make an initial inspection to ensure that no damage has occurred during shipping and familiarize yourself with the operation and proper use of your new Pulse-Bac®.

Safety is paramount when operating any machinery. Safety is a combination of common sense and staying alert when operating industrial equipment. Read this operator's manual and understand it. The following safety rules should be observed when operating the vacuum.

Safety Signal Words used in this Manual and their meaning as used:

- **Danger:** Means if the safety information is not followed the likelihood that the operator or bystanders will be seriously injured or killed is very high.
- **Warning:** Means if the safety information is not followed the operator or bystanders could be seriously injured or killed.
- **Caution:** Means if the safety information is not followed the operator, or bystander may be injured or the vacuum machine maybe damaged.

WARNING:

- **To reduce the risk of fire, electrical shock, or injury, read and understand the owners manual and all labels on the Pulse-Bac® before operating. Use the Pulse-Bac only as described in this manual.**
- **Your Pulse-Bac® is designed to vacuum dry material only. Never use the machine to vacuum liquids of any kind.**

Introduction:

Important! Please Read The Following Carefully.

Static Shocks are common and occur in dry areas or when the relative humidity of the air is low. Be aware of low humidity conditions and if static shocks are persistent, order a static proof vacuum hose to reduce static shock. CDCLarue™ recommends anyone using a Pulse-Bac for collecting wood dust to always use a static reduction hose. Keep in mind wood particles create static electricity even when the humidity is normal.

Extension Cord Usage:

When using an extension cord to operate your PB-1050 ,PB-1150, or PB-1250 always use the proper size extension cord. The chart on the following page will help you in your selection of extension cords. Please note, not using the proper size of extension cord can cause damage to electrical and motor components. Not using the proper extension cord may cause the warranty to be voided.

Proper Extension Cord — Gauge and Length

Extension Cord Length	Wire Gauge (A.W.G.)
0-25 Ft.	12
50 ft.	10

Unpacking & Checking Carton Contents:

1. Remove the vacuum and its contents from the shipping carton or cartons.
2. Check each item against the packing list.
3. Contact your carrier if any items are damaged or missing. If you require additional help contact CDCLarue™ customer services at (918)-216-6100.

Emptying The Vacuum Collection Tank:

WARNING:

To reduce the risk of injury from accidental starting, turn the vacuum off and unplug the power cord before emptying the collection tank.

1. To remove top hood assembly from the collection tank, simply unlatch the two latches on either side of the collection tank and lift the top hood off the tank. Set the top hood assembly down on top of the filters.
2. Take hold of the top of the collection tank with one hand, lift the tank with the handle at the center bottom of the tank, and with your other hand, dump the contents into the proper waste disposal container.

WARNING:

To reduce the risk of back injury or falls, do not lift a collection tank heavy with dust and debris. Scoop enough contents out to make the collection tank light enough for one person to lift comfortably.

Maintenance:

The Pulse-Bac® requires little or no preventive maintenance; however the performance of the three cartridge filtration system can be enhanced by allowing the PB-1050 / PB-1150 / or PB-1250 to run for 3 to 5 minutes after each days use. ***The cartage filters should never be removed for cleaning***. The only time the filters should be removed is when replacing old filters with new filters. Removing the filters for cleaning is highly discouraged as this action may cause many problems. If filters are not replaced properly damage can occur. For proper operation when using a Pulse-Bac® vacuum for dust collection, filters should be changed a minimum twice a year.

Limited Warranty

Pursuant to the specific terms and conditions set forth herein, CDCLarue Industries, Inc. (“CDCLarue”) warrants all products manufactured by CDCLarue™ for a period of one (1) year from any defects in materials and workmanship arising under normal usage and care, The aforesaid warranty shall extend only to the original purchaser of the product and all CDCLarue Distributors based on the original date of purchase, but under no circumstances shall the warranty extend past thirteen (13) months from CDCLarue original shipment date, regardless of to whom the shipment was sent or when the purchaser purchased the product. The original date of purchase will be the date indicated on a bill of sale or receipt.

The purchaser’s remedies under the aforesaid warranty and CDCLarue total obligation under the aforesaid warranty is limited to repair or replacement of any and all parts or components covered under this limited warranty at the sole discretion of CDCLarue. The product or products must be returned to CDCLarue place of business, along with a copy of the bill of sale or receipt indicating the original date of purchase, and all freight costs associated with the return of the product or products to CDCLarue for repair or replacement and subsequent freight costs associated with the return of the product or products to the purchaser will be the sole responsibility of the purchaser. In the event that the original date of purchase cannot be determined by a bill of sale or receipt, then the original shipment date according to the records of CDCLarue shall be used as the original date of purchase. This limited warranty is not transferable or assignable. This limited warranty shall not apply if the product or products have been abused, misused, altered or damaged by purchaser or a third party. IN NO EVENT WILL CDCLARUE BE LIABLE FOR ANY DIRECT, INDIRECT, CONSEQUENTIAL, INCIDENTAL, SPECIAL, PUNITIVE OR OTHER DAMAGES OR FOR ANY CONTINGENT LIABILITY ARISING OUT OF THE FAILURE OF OR USE OF ANY CDCLARUE PRODUCT, INCLUDING BUT NOT LIMITED TO LOST PROFITS AND/OR LOSS OF INCOME, WHETHER OR NOT CDCLARUE HAS BEEN ADVISED OF THE POSSIBILITY OF SUCH DAMAGE, AND REGARDLESS OF WHETHER ANY REMEDY SET FORTH HEREIN FAILS OF ITS ESSENTIAL PURPOSE.

THE WARRANTIES CONTAINED IN THIS LIMITED WARRANTY ARE IN LIEU OF ALL OTHER WARRANTIES. EXCEPT AS EXPRESSLY SET FORTH ABOVE, CDCLARUE EXPRESSLY DISCLAIMS AND NEGATES ALL REPRESENTATIONS OR WARRANTIES, WHETHER EXPRESS OR IMPLIED, IN FACT OR IN LAW, RELATING TO THE PRODUCTS (INCLUDING WITHOUT LIMITATION (A) ANY IMPLIED OR EXPRESS WARRANTY OF MERCHANTABILITY, (B) ANY IMPLIED OR EXPRESS WARRANTY OF FITNESS FOR ANY PURPOSE, (C) ANY IMPLIED OR EXPRESS WARRANTY OF CONFORMITY TO MODELS OR SAMPLES OF MATERIALS, (D) ANY IMPLIED OR EXPRESS WARRANTY REGARDING THE CONDITION OF THE PRODUCTS AND (E) ANY IMPLIED WARRANTY ARISING FROM COURSE OF PERFORMANCE, COURSE OF DEALING OR USAGE OF TRADE).

Service Location Pictorials and Test Points:

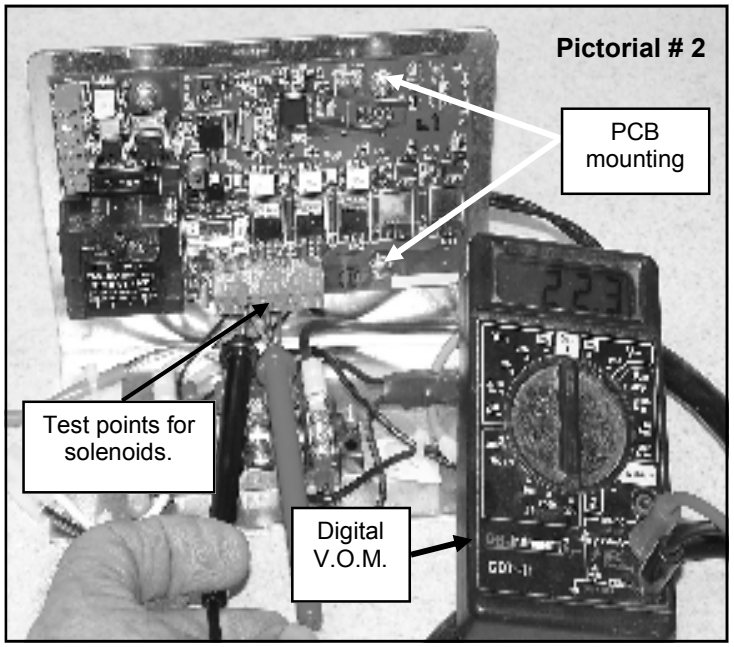

Screws holding hood on

Pictorial # 1

Analog V.O.M.

Digital V.O.M.

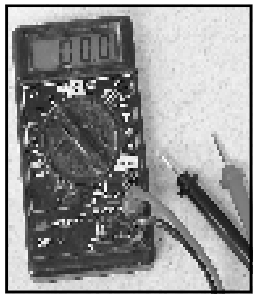

Maintenance Continued:

Although the Pulse-Bac® cleans it's filters continuously during operation, small amounts of debris will cling to the surface of the filters under normal operating conditions. Operating the PB-1050, PB-1150, or PB-1250 for three to five minutes before and after each days use will help the filters to purge themselves of most dust and debris. This extra step will help to extend the life of the filters, enhance performance, and reduce operating cost.

Operating & Safety Tips:

- Never operate in a wet environment.
- Never operate with an ungrounded power source.
- Never operate with an improper or ungrounded electrical extension cord.
- Never operate unattended.
- Never vacuum hot ashes or combustible materials.
- Never operate in conjunction with any ungrounded equipment.
- Always use a proper 120 volt 20 amp electrically protected outlet to operate.
- To reduce risk of electrical shock, do not expose to rain and always store indoors.
- Never operate the Pulse-Bac in the presence of explosive vapors.
- Always unplug the Pulse-Bac when not in use and before servicing.
- Turn your Pulse-Bac off before unplugging from the power source.
- Never operate the Pulse-Bac from a generator that is not earth grounded.

WARNING:

Sparks generated by the vacuum motor can ignite flammable vapors or dust.

To reduce the risk of fire or explosion:

Never vacuum or use the machine near flammable or combustible liquids, gases, or explosives fluids like gasoline, lighter fluids, cleaners, oil-based paints, natural gas, hydrogen, coal dust, magnesium dust, grain dust, gun powder or other types of flammable vapors or fuels.

Filter Installation:

When you receive your new Pulse-Bac® you will be required to install the filters onto the vacuum head. Follow these instructions (1) thru (5) to insure proper filter installation.

1. If not already installed, install the O-Ring (P/N # 401979) onto the O-Ring groove at the top of the twist on filter as shown in figure 1.

2 If not already installed, install the foam Dust Ring (P/N # 403242) into the outer groove of the filter.

NOTE: The foam dust ring helps to prevents dust from accumulating between the top of the filter and the filter receiver, it doesn't create a seal for the filter. The O-Ring is the only seal for the filter.

3. Check to ensure that the filter receiver is clean and void of any dust or foreign material before screwing your filter into place.

4. Insert the filter into the filter receiver and twist in a clockwise direction until the filter just touches the base, then turn the filter one quarter turn to tightly secure it.

5. Once the filters have been installed, the vacuum is ready to be put into service.

Caution:

Once you have installed the filters on the Pulse-Bac, the filters should never be removed unless they are to be replaced. Removing the filters after initial installation can cause various problems if not reinstalled properly. Since your new Pulse-Bac cleans its filters automatically, you should never have reason to remove the filters other than for replacement.

If you need assistance or require additional information when installing the filters, you can contact CDCLarue customer services department at (918) 216-6100. We will put you in contact with a technician that can help you accomplish the installation and answer any questions you may have.

Figure #1

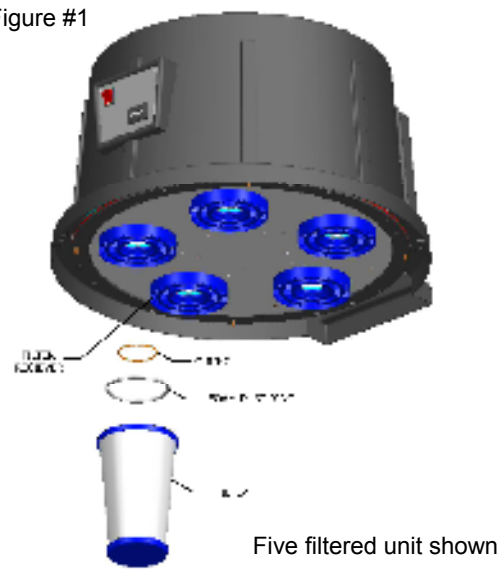

Five filtered unit shown

Servicing Continued:

- Connect your positive lead to points one, two and three individually on the solenoid connection block. Your VOM should read approximately 22 ohms at each test point if the solenoid is good and infinity or zero if the solenoid is bad. (see pictorial # 2) on page 20.

- If you have a bad solenoid, you will need to remove the motor and it's motor mount to gain access to the bad solenoids. You can determine which solenoid to replace by noting the color of the wire when taking readings from the solenoid connection block on the PCB. see page #13 for details on removing the motor and the motor mount.

- Turn to page #9 of this manual for the location and identification of test points on the printed circuit board.

- Connect your VOM negative test lead to the point on the solenoid connection block on the printed circuit marked (SC) or solenoid common.

- Once you determine which solenoid to replace, disconnect the solenoid from the valve stem by removing the retaining clip on the retaining pin then remove the retaining pin to release the solenoid plunger from the valve stem. Do not use the old solenoid plunger or remove the valve to replace the bad solenoid.

- Remove the solenoid control wires by removing the quick connect connectors and remove the four Phillips screws holding the solenoid to the solenoid mounting plate by using a small #4 Phillips screw driver.

- Replace the bad solenoid by reversing the above directions used to remove the solenoid.

- When installing the new solenoid make sure you use lock tight on the Phillips screws holding the solenoid to the solenoid mounting plate. If you do not lock tight the screws holding the Solenoid to the solenoid mounting plate they may come loose and go through the motor fan causing irreversible damage.

- If you require help when replacing a solenoid, you can contact CDCLarue™ service department for support or conformation of details relating to the replacement of your solenoids.

Servicing continued:

Printed Circuit Board Replacement:

- Disconnect the Pulse-Bac® from the electrical power source.
- Remove the hood cover by removing the four 5/16 " X 10 X 3/4" screws holding it to the base plate. (see pectoral # 1) on page # 20.
- Before completely removing the hood disconnect the wiring to the power switch (sensor alarms, and alarm LED light if equipped) by disconnecting the Molex connectors which connects the wiring to the main base plate of the Pulse-Bac.
- Locate the four 8/32 x 1/2" screws holding the PCB to the electrical assembly and remove them and let the board float free.
- Disconnect the six 18 gage wires from the printed circuit board. (see pictorial #2) page # 20.
- Replace the PCB by reversing the removal directions. The 18 gage wires that connect to the solenoids must be replaced in the proper order for the vacuum system to perform correctly.

Replacing Valve Solenoids:

- Before replacing any or all of the solenoids, you must first determine which if any solenoid is defective. You can determine if a solenoid is defective as follows;
- Disconnect the Pulse-Bac from the electrical power source.
- Remove the hood cover by removing the four 5/16 " X 10 X 3/4" screws holding it to the base plate. (see pectoral # 1) on page 20.
- Disconnect the wiring to the power switch (sensor alarms, and alarm LED if equipped) by disconnecting the Molex connectors which connects the wiring to the base plate of the Pulse-Bac, before completely removing the hood.
- Locate the printed circuit board and the wiring for the solenoids. (see pictorial #2) on page 20.
- You will need to use your volt ohm meter to determine which if any of the solenoids is defective. Set you VOM to ohms using a scale of 200 ohms or less. Be sure to zero your meter before taking your readings.
- Turn to page #20 of this manual for the location of test points on the printed circuit board.
- Connect your VOM negative test lead to the common point on the solenoid connection block on the printed circuit board marked (SC) or solenoid common.

Specifications, Patents and Award Information for all Models;

The PB-1050, PB-1150 and PB-1250 are products from CDCLarue™ 1000 series. Each Pulse-Bac vacuum and dust recovery system is designed for applications that require different levels of lift (suction) and CFM (flow rate). The 1000 series of from CDCLarue™ come with CDCLarue exclusive Pulse-Bac® Technology, capable of preventing the filters from clogging and losing lift during operation, along with additional features not found on other competitors products.

CDCLarue revolutionary Tank Capacity Sensor (TCS) is available for installation on all 1000 series models. The sensor is an industry first as are a lot of the features found on CDCLarue products. TCS is available on all models as an option from the factory when you order your Pulse-Bac® or as an update at a later time. The TCS system senses when the tank is full and activates an audible and visual alarm to alert the operator, so to prevent the vacuum system from over filling the tank and damaging the filters. If not turn off in a timely manner after being fore warned, the TCS system will automatically shut off the vacuum motor.

Specifications

Models	P1050. PB-1150, PB-1250	**Voltage**	120 Volts 50/60 Hz Single Phase all Models.		
Filtration System	Patented Pulse-Bac® Technology	**Current**	PB-1050 12.1	PB-1150 15.1	PB-1250 15.5
Filters	3 ea. Twist-on/off 100% Spun Bond Polyester PTFE Coated, all Models.	**Dimensions**	PB-1050 23" X 39" X 21" PB-1150 23" X 39" X 21" PB-1250 23" X 39" X 21"		
Motor	See motor specification for each individual dust collector on page # 13	**Weight**	PB-1050 79 lbs.	PB-1150 82 lbs.	PB-1250 82 lbs.
Performance	1050; 140 CFM 89" sealed lift. 1150; 170 CFM 110 " sealed lift. 1250; 245 CFM 70" sealed lift.	**Storage Tank**	20 Gal. Tank, all Models.		
Vacuum Port Inlet	2" inlet, all Models.	**Casters**	Non-Marking Five inch, all models.		

Patents & Awards:

US Patent # 7082640B2. Other patents pending.

Pulse-Bac® Technology-Most Innovative Product, World of Concrete 2005 & 2008.

Pulse-Bac Technology-Innovative Product of the year, Rental Equipment Register 2004.

Operating Pulse-Bac® for Dust Collection with other equipment:

When operating a Pulse-Bac Dust Recovery System with other equipment, you should take into account the following:

1. Make sure the equipment that you have chosen to operate with the dust collector is properly grounded with a third or fourth wire ground.

2. To ensure peak performance from your Pulse-Bac, check to see that the dust collector has the proper size and rating to support the equipment you intend to operate with it. If you are ok as to the proper model for the equipment you intend to operate with it, check with CDCLarue™ customer services.

3. Always connect the dust collector with the proper size of vacuum hose and extension Cord. Make sure you have the correct length and size of vacuum hose and electrical extension cord for the equipment you intend to use in conjunction with the Pulse-Bac.

4. Operating as a dust collector with a generator requires a minimum of 5K Watts to properly support the operation of any one of the PB-1000 series. When using a generator be sure to earth ground the generator to protect the Pulse-Bac electrical circuitry. Failure to earth ground the portable generator could cause major damage to your Pulse-Bac.

The pictorial below shows a PB-1050 operating correctly with a seven inch surface grinder.

Servicing your Pulse-Bac®:

With regular use the Pulse-Bac may require repair of critical components from time to time. This section of your manual will provide information for a qualified technician to make repairs to the machine when required. Most repairs to the machine can be made at your facility if the technician making the repairs is trained in electrical and mechanical theory. If you are not qualified to repair the vacuum you can contact CDCLarue™ Service department or have the unit returned to CDCLarue or one of CDCLarue authorized service centers for repair. If you or someone you know are qualified and need additional assistance in the repair of the machine, you can contact CDCLarue Service department and a qualified technician will help you to complete the repair.

CDCLarue recommends that any repairs made to the valve system in your Pulse-Bac either be made by CDCLarue or a technician that is qualified in the theory and repair of electro mechanical equipment.

Danger:

Attempting to repair any electro mechanical equipment without proper knowledge of the theory of electricity and mechanics can be detrimental to your health and well being and could cause death or major injuries. You should not attempt any of the following repairs without being qualified in electrical and mechanical repair theory.

If you or someone you have retained plan to make repairs on your Pulse-Bac you will need at a minimum the following tools and test equipment;

Volt ohm meter, digital or analog, Phillips screw driver #4 & #3, needle nose pliers, 5/16 " nut driver, 3/8" end wrench, and 1/8" X 2" slot screwdriver.

Motor Assembly Replacement:

To replace the motor assembly on a PB-1050, PB-1150, and PB-1250 follow the instruction below, each unit is similar in design, requiring little or no difference between units to remove the motor assembly and replace it with a new motor assembly. Motor assembly part numbers can be found on page # 13 and the assembly can be ordered from CDCLarue.

- Disconnect the Pulse-Bac from electrical power source.

- Loosen the hood cover by removing the four 5/16 " X 10 X 3/4" screws holding it to the base plate. (see pectoral # 1) on page # 20.

- Lift the hood and disconnect the wiring to the power switch (TCS alarm and alarm LED if equipped), by disconnecting the Molex connectors which connects the wiring to the main frame of the vacuum before completely removing the hood.

- Disconnect the wiring to the motor by unplugging the motor's Molex power connector.

- Remove the three 3/8" lock nuts and bolts securing the motor to the motor mount. Lift up on the motor to break the motor seal loose and remove the motor assembly.

- See parts replacements on page #13 to help in securing the proper motor assembly for your Pulse-Bac. Reverse the above instruction to mount the new motor.

Trouble Shooting Guide:

1. Unit will not start.

- Check for proper power source at the electrical outlet.
- Check cord cap for proper connection.
- Check to see that switch is in the ***on*** position and light is lit.
- Check internal 20 amp fuse.

2. Unit's CFM & Lift is low.

- Check to see if vacuum head is properly aligned on the tank and the seal is in good condition.
- Check to see if filters have become saturated with debris.
- Check to see if purging system is operating correctly.
- Check inlet hose for obstructions.

3. Unit has dust coming out of exhaust vents.

- Check to see if filters are tight and seals are in good condition.
- Check filters for tears or cuts.
- Check to see if filters are saturated.
- Check main fuse.

4. Unit has no suction and motors are not working.

- Check power to unit.
- Check power switch.
- Check motors.
- Contact CDCLarue™ for Service assistance at 1-918-216-6100

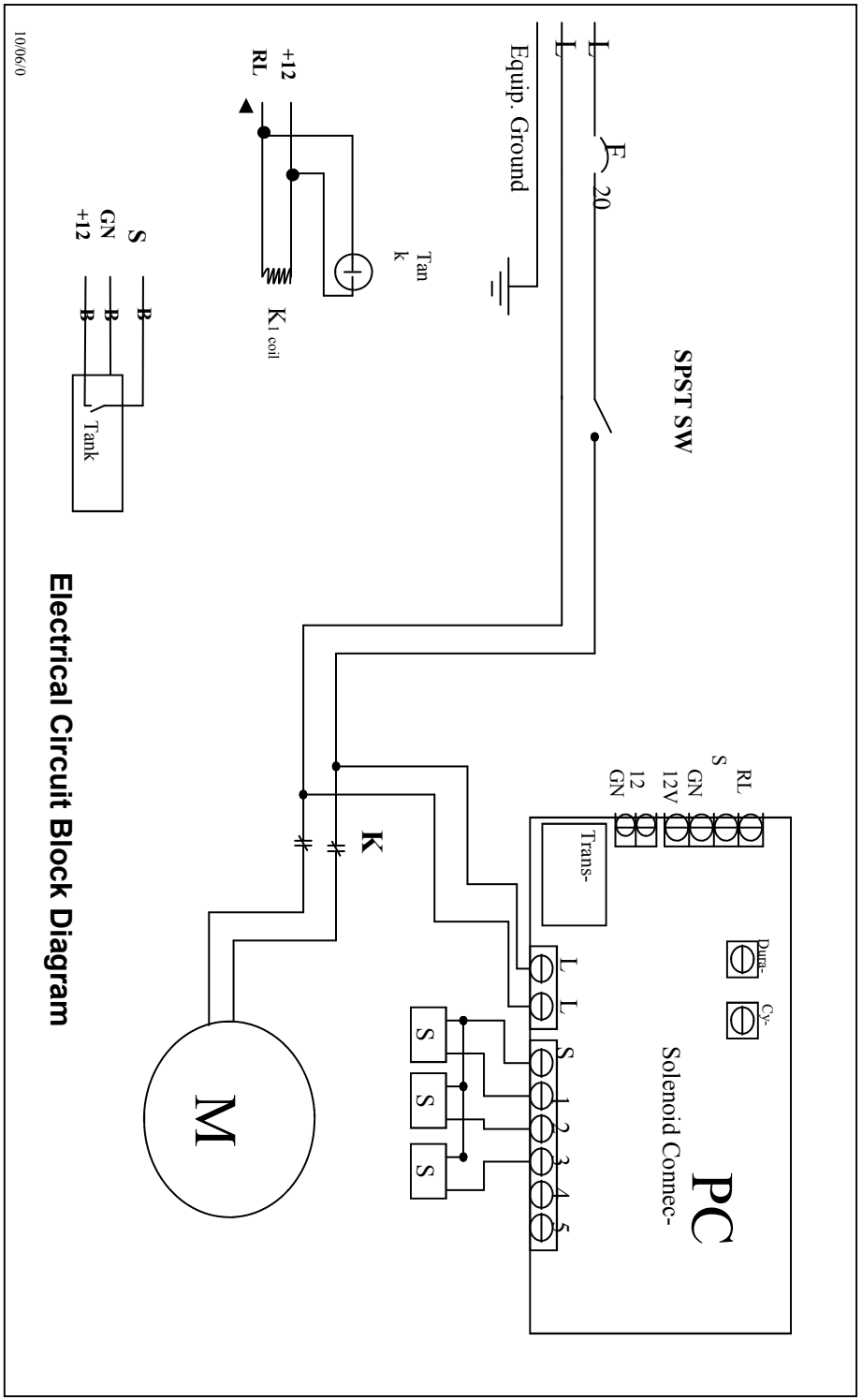

Electrical Circuit Block Diagram

CDCLarue™ 5 / 3 Channel Timer PCB Revision "D" Functional Description:

Overview;
The Channel Timer circuit design supports several different operating modes – each of these modes are described in subsequent sections. At the heart of the design is a microcontroller which handles all of the processing. Upon initial power-up, the microcontroller reads the settings for the Duration & Cycle Adjust Timers and determines if board supports 3 or 5 channels. Once this information is determine, the Cycle Timer begins its countdown, once it expires, Solenoid #1 is activated and the Duration Timer begins its countdown. Upon expiration of the Duration Timer, Solenoid #1 is deactivated. Prior to activating the next Solenoid, the microcontroller inserts a 5 second pause to allow the pressure in the tank to fully recover. Solenoid #2 is then activated for specified Duration, followed by another 5 second recovery period. This sequence repeats itself until the last Solenoid (either #3 or #5) has been activated, which completes the cycle. The Cycle Timer is then reloaded and the countdown begins once again.

Fixed vs. Variable Duration:
The ON duration of the Solenoids is either Fixed or Variable depending on the selected operating mode. The operating mode is determined by the R16. When R16 is installed, the unit operates in Variable Duration Mode, which has a range of 0.1 to 1 0 seconds (in 5 millisecond steps). When R16 is removed, the Duration is fixed.

Cycle Duration:
The Cycle Duration has a range from 5 to 105 Seconds (in 200 millisecond steps). The actual time is determined by a potentiometer mounted on the board.

3ch vs. 5ch Selection:
R14 determines whether the unit operates in 3ch or 5ch Mode. When R14 is installed, the unit operates in 5ch mode. When R14 is removed, the unit operates in 3ch mode.

110V vs. 220V Selection:
Resistors R110A & B and R220 configure whether the unit operates with 110V or 220V input. For 110V operation, R110A & R110B should be installed (R220 must not be installed). For 220V operation, R220 should be installed (R110A & R110B must not be installed). These appropriate resistor configuration must be in the appropriate position prior to powering up the printed circuit board.

12Vdc Auxiliary Output:
The Auxiliary 12Vdc output will provide approximately 200ma@12Vdc.

Sensor Support Circuit:
The 12Vdc Auxiliary Output above may be used to power an external (sensor) circuit, which may in turn drive an on-board relay circuit. The terminal labeled "SOUT", may be connect to the sensor's output – this is actually an input (0 to 12Vdc), which is active high (input voltage from 3 to 12Vdc). The state of this input drives an output, RLY, which is a low side relay driver. This output can sink up to 200ma of current at 12Vdc.

Spare Input/Output:
The board contains a spare I/O. At this time, there are no features associated with this provision. If needed, this line can be used as a digital input, digital output, or for an analog sensor.

Positioning Optional Tank Capacity Sensor (TCS):

Your new PB-1050, PB-1150, or PB-1250 may be equipped with CDCLarue™ exclusive TCS system, if not, you can order this option at anytime in the future as your machine is already equipped to accept the TCS feature at a later date. The TCS requires you to put it in it's proper position prior to putting your Pulse-Bac® into service, this will insure proper operation of the Pulse-Bac.

Position the TCS as follows:

1. The TCS is shipped in the position shown in pictorial # 1.
2. Loosen the butterfly screw "A" and move the TCS rod to the upright position as shown in pictorial # 2.
3. Position the TCS rod at a 90° angle as shown in pictorial # 3.
4. Tighten the butterfly screw "A" to hold the TCS rod in place as shown in pictorial # 4. Do not over tighten the butterfly screw.
5. After the TCS rod is in place, the filters can be installed. (see page # 10)

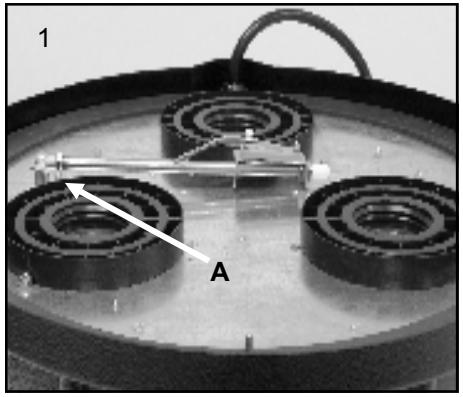

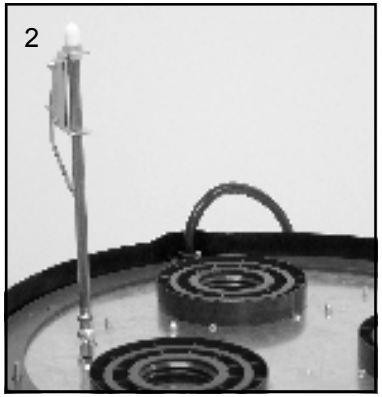

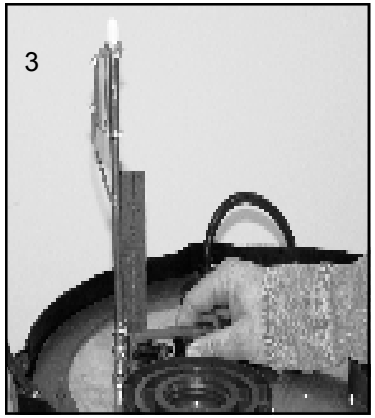

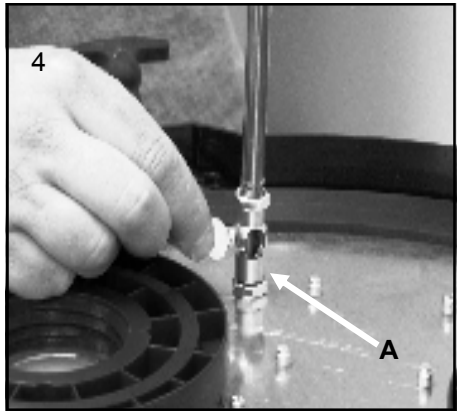

TANK CAPACITY SENSOR (TCS):

The PB-1050, PB-1150, or PB-1250 can be equipped with CDCLarue™ exclusive Tank Capacity Sensor (TCS). The TCS system is designed to prevent the vacuum from over filling the collection chamber and causing damage to the filters and vacuum motor components. Be sure to read and understand the instructions for setting up the TCS system when you receive your Pulse-Bac® instructions for positioning the TCS rod. This can be found on page # 13 of this manual. If you require additional assistance when positioning the TCS call CDCLarue customer services at 1-918-216-6100.

Pictured below in (figure #2) is the TCS in it's proper position for operation inside the Pulse-Bac. The Pulse-Bac is equipped with operational indicators on the front control panel and operates as follows;

Warning:

Once the TCS has turned the vacuum motor off and signaled the operator with a visual and audio alarm, the vacuum motor may restart automatically when the vacuum head is removed from the tank. Always turn the Pulse-Bac power switch to the off position before removing the head to empty the tank after the TCS system has engaged. IF not done, the vacuum motor will restart, causing the operator to possible injury his or herself. Turning the power switch to the off position will silence the audible alarm and extinguish the visual alarm while ensuring the vacuum motor will not restart.

1. When the TCS is installed on the Pulse-Bac, the front nameplate will be equipped with a red LED light indicator that when lit notifies the operator that the TCS has detected a full tank sounded an audible alarm and has turned the vacuum motor off. (see fig. 1)

2. The vacuum motor will not start unless the tank has been emptied or the sensor is cleared.

3. The audio alarm will continue to sound off until the sensor is cleared or power switch is turned off.

Figure #2.
TCS Rod Assembly

Figure #1. Front panel controls and audio alarm.

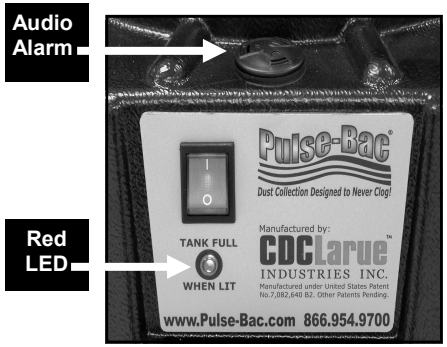

Electrical Schematic, 3 / 5 circuit Printed Circuit Board

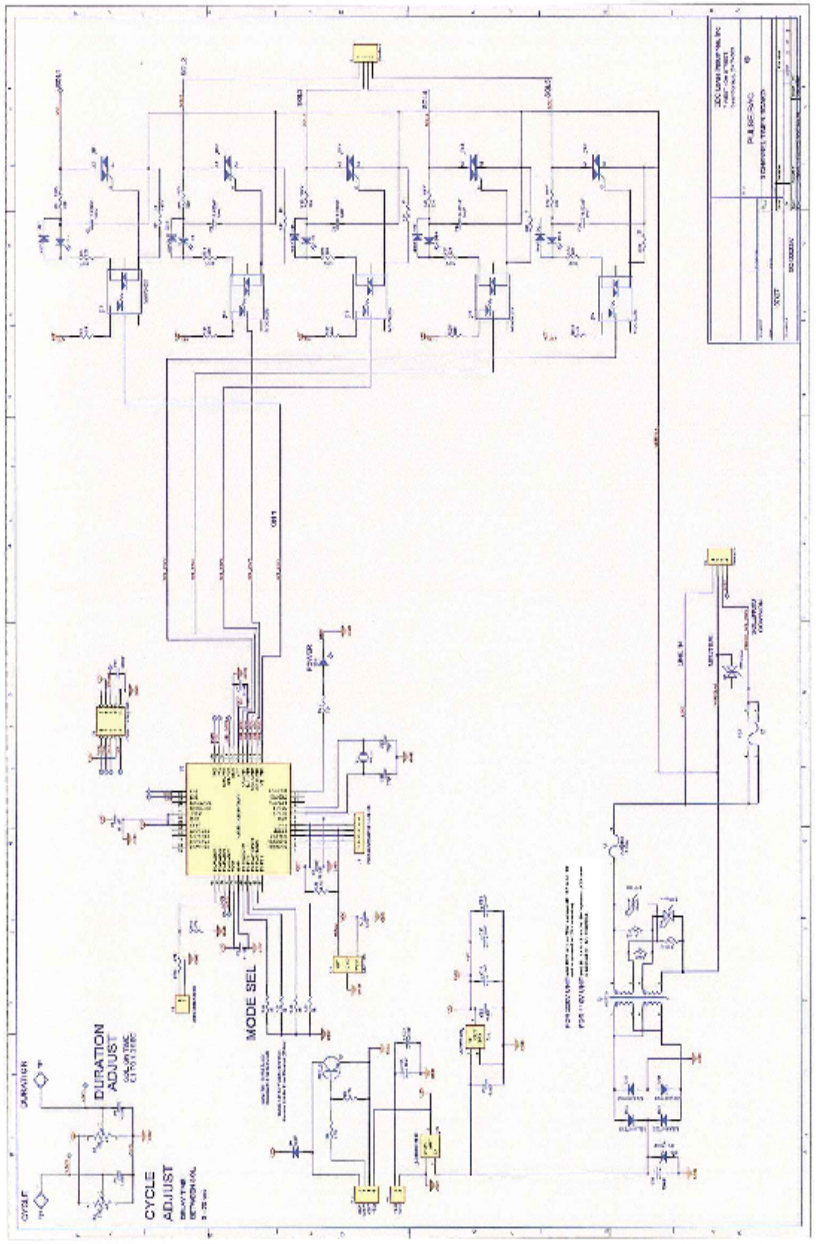

Changing Filters:

WARNING: For your safety, always turn off and disconnect the vacuum from the power source before replacing filters or performing any type of service.

To Replace filters:

Note: For best results, clean the bottom of the top filter receiver assembly after removing old filters and before replacing with new filters.

1. Remove the vacuum head from the collection tank and place it upside down on the floor or work bench.

2. Locate the filters, remove each filter by turning counter clockwise and pulling the filter straight up and away from the assembly.

3. Place a rubber o-ring and dust gasket on each new filter. Screw each filter on clockwise until snug, and then continue turning one quarter turn until filter is tightly fitted.

4. Place the vacuum head on top of the collection tank and secure it by latching it to the collection tank with the rubber latches. The Pulse-Bac® is now ready for service.

Note: Filters should be changed out regularly to maintain peak performance. Do not use a filter with holes or tears, or missing o-rings. The filters are made of high quality Spun Bond Polyester media with a P.T.F.E coating, designed to stop particles as small as .1 micron, the filters should be used for dry pick-up only, and changed out regularly. CDCLarue recommends the filters be changed every four to six months or twice annually.

ITEM	P/N	DESCRIPTION	QTY
1	[illegible]	FILTER KIT	1

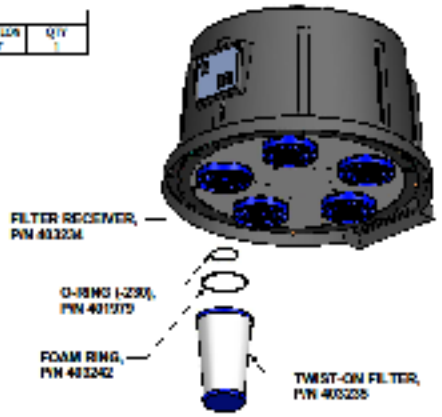

FILTER INSTALLATION

PB-1050

ITEM	P/N	DESCRIPTION	QTY
1	[illegible]	MOTOR ASSEMBLY	1
2	[illegible]	[illegible]	1
3	[illegible]	BOLT, 1/4"-20 X 1.00"	3

PB-1150

ITEM	P/N	DESCRIPTION	QTY
1	[illegible]	MOTOR ASSEMBLY	1
2	[illegible]	[illegible]	1
3	[illegible]	BOLT, 1/4"-20 X 1.00"	3

PB-1250

ITEM	P/N	DESCRIPTION	QTY
1	[illegible]	MOTOR ASSEMBLY	1
2	[illegible]	[illegible]	1

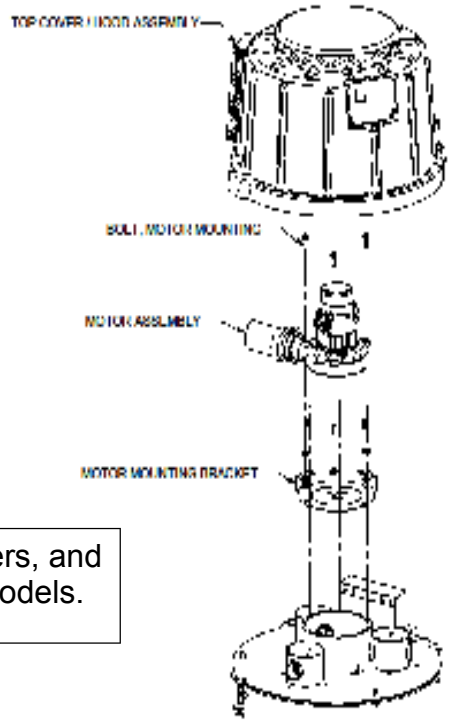

Motor Assembly part numbers, and assembly location for all models.

ITEM	P/N	DESCRIPTION	QTY
1	403862	DOLLY, WIDE STANCE, RETROFIT	1
2	405208	CASTER, 5" w/ LOCK [405046]	1
3	405046	CASTER, 5" w/o LOCK	4
4	405233	NUT, #1/2-13, FLGD LOCK	5
5	405202	BOLT, 1/2-13 X 1.25", BLACK COATED	5

ASSEMBLY PROCEDURE
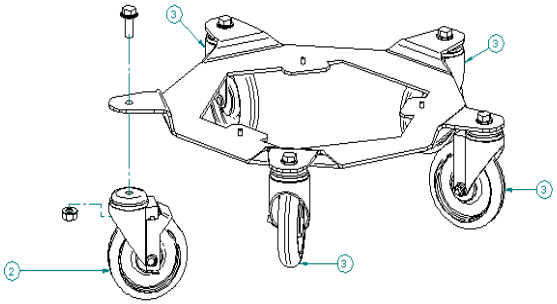
1) INSTALL THE ½-13-1.25" BOLT IN ONE OF THE ½" HOLES ON THE DOLLY; ALIGN THE 5" CASTER (P/N 405046 / 405208) WITH THE BOLT AS SHOWN AND FASTEN THE BOLT WITH ½-13 FLANGE LOCK NUT AS SHOWN IN THE EXPLODED VIEW. REPEAT THE ABOVE FOR THE REMAINING 4 CASTERS.